LOCATION TRACKING AND DETECTION OF ELECTRICITY THEFT USING IOT

Chandran G

Assistant Professor
Department of EEE
DMI College of Engineering, Chennai
Email-chandrangeee@gmail.com

***Abstract*— Generation, transmission and distribution of electrical energy contain many operational losses. Whereas, losses concerned in generation may be technically defined, however transmission and distribution losses can't be exactly quantified with the sending end information. Electrical energy theft detection method is worn to locate an illegal tapping on distribution lines. Implementation environs of this method are a distribution network of electrical energy delivers system. Surviving structures aren't capable of the exact location of the tapping. This method certainly unearths out on which electrical line, there's a tapping.**

Key words-Electrical Energy, Theft detection, Distribution Network, Tapping

I.INTRODUCTION

The electrical energy is required to be protected for proficient power delivery to the customer due to the fact energy is necessary to domestic and business development activity[1]. There are two types of losses technical and Non-technical losses[2]. Every year the electricity companies fare the line losses at an average 20-30% according to power ministry WAPDA Company‟s loss more than RS.125 billion.

T&D losses have been a concern for the Indian electricity sector [2].Since those had been very excessive whilst as compared with different evolved countries. The current T&D losses together with unaccounted power are approximately 30% and there's need to reduce those losses via efficient management the finest operation and maintenance practice of the transmission and distribution. When we talk around T&D losses it's also the theft of electricity, even though it is the a part of business, loss however, there's no manner to segregate theft from the T&D losses.

ARDUINO

The Arduino Nano is a small, complete, and breadboard-pleasant board primarily based totally at the ATmega328 (Arduino Nano 3.x) [2]. It has extra or much less the equal capability of the Arduino Duemilanove, however in an exceptional package. It lacks simplest a DC power jack, and works with a Mini-B USB cable in place of a trendy one.

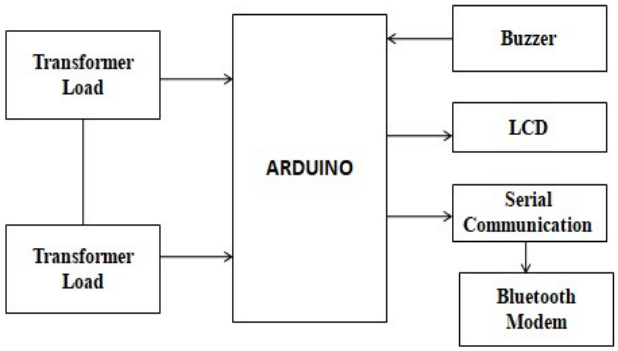

Fig.1 Block Diagram of the system

Transformer

The Current Transformer (CT) may be a class of "instrument transformer" that's designed to generate an AC in its secondary coil which is proportional to the current being measured in its primary. Current transformers are generally wont to measure currents of high magnitude.

Current transformers reduce high voltage currents to a greatly lower value and grant a convenient way of safely monitoring the real electrical current flowing in an AC transmission line using a standard ammeter [1]. The principal of operation of a current transformer is not any different from that of a regular transformer.

Signal Conducting Unit

The LM124 series consists of four independent, high gains internally frequency compensated operational amplifiers which were designed specifically to work from one power supply over a good range of voltages. Operation from split power supplies is additionally possible and therefore the low power supply current drain is independent of the magnitude of the power supply voltage. Application areas include transducer amplifiers, DC gain blocks and every one the traditional op amp circuits which now are often more easily implemented in single power supply systems. for instance, the LM124 series are often directly operated off of the quality +5V power supply voltage which is employed in digital systems and can easily provide the specified interface electronics without requiring the extra ±15V power supplies

Certain other components like blue tooth, Relay, GPS module, the LCD display also are used. Bluetooth will send the signal when the electricity gets the fatted in order that people within the neighboring area are informed about the crime, electric board centers become active and analysts at the bottom station start detecting the situation changes and variations in smoke concentration. GPS module is required for communication with the electrical station using serial communication standard. Current readings are displayed on the LCD display, which are later transmitted to the receiving mobile using GPS when the theft occur.

II.LITERATURE SURVEY

P. Jokar, N. Arianpoo et al.[1] Proposed in this paper, we have introduced CPBETD, a new algorithm for detecting energy theft in AMI. CPBETD relies on the predictability of customers' normal and malicious usage patterns. Along with application of SVM anomaly detector, the algorithm uses silhouette plots to identify the different distributions in the dataset, and relies on distribution transformer meters to detect NTL at the transformer level. We have shown that these features provide a high performance and make the algorithm robust against non malicious changes in consumption pattern as well as data contamination attacks. In practice, the required performance for an ETDS may vary across different regions. We have shown that by introducing some delay tothe detection algorithm, an adjustable performance to match different objectives is achievable. Using extensive experiments on a real dataset of 5000 customers, we have shown that the proposed algorithm provides a high-performance even with a low sampling rate, which helps to preserve customers' privacy.

Chun-sen XU, Xiang-jian CHEN, Di LI et al.[2] Proposed in this paper the ZigBee technology is a new wireless protocol that widely used various areas for its excellent performance in reliability, capability, flexibility and cost, ZigBee corresponds to a large market. This paper provides an application in the field of automatic Electric Meter Reading System. With the developments of the ZigBee technology and the communication network technology of computer, wireless Electric Meter Reading System grows up and practical mostly.

A. H. Nizar et al.[3] Proposed in this study, the proposed NTL analysis framework that has been developed is intended for application in the identification, detection, and prediction of NTL linked activities involving power utility customers. Of the five main modules to be presented, data pre-processing, detection, feature selection, classification, and prediction, those for selection, classification, and prediction are yet to be considered. This paper presented the proposed NTL analytical framework and the associated key data-mining algorithms to be used in NTL activity identification, detection, and prediction, including Extreme Learning Machine (ELM), Online Sequential ELM (OS-ELM), and Support Vector Machine (SVM). Several key flow processes in pre-labelling customers' behavior are also described in this paper, along with a pre-processing procedure to separate the raw data on the basis of types of days so as to normalize the data. This paper also presents customers' load analysis and its assesses the correlation of such loads with time, weather, and calendar-events factors.

Soma Shekara Sreenadh Reddy Depuru et al.[4] Proposed in this paper defines electricity theft in social, economical, regional, political, infrastructural, literacy, criminal and corruption points of view. This paper illustrates various cases, issues and setbacks in the design, development, deployment, operation, and maintenance of electricity theft controlling devices. In addition, various factors that influence people to steal electricity are discussed. This paper illustrates the effect of NTL on quality of supply, burden on the generating station and tariff imposed on genuine customer.

R. E. Ogu and G. A. Chukwudebe et al.[5] proposed in this paper the Checking electricity theft will drastically affect the power sector positively, as power companies will make adequate money from the sale of electricity and plans to improve the system. The only existing system that closely

relates to the system developed in this paper, is the system developed in [2]. For analytical purposes, in order to actualize the system of [2], the Arduino Mega 2560 and Arduino WiFi Shield 101 cost $35.00 and $49.95 respectively; this gives a total of $84.95. In this work, a single board (Arduino MKR1000) performs the functions done by the two separate boards above (the Arduino Mega 2560 and the Arduino WiFi shield 101). The cost of Arduino MKR1000 is $44.95. Comparing the total cost of the Controller and the network interface of [2], which is $84.95 to $44.95 which is the cost of an amalgamated board that has a controller and the network interface together, it can be clearly understood that the cost has been drastically reduced. This paper has succeeded in designing a cost effective electricity theft detection and prevention system using the Internet-of-Things technology by using a single board to act as a controller and a network interface. The paper also verified the designed system by constructing and testing a prototype of the system using the components outlined in this paper.

Zibin Zheng et al. [6] Proposed in this paper, we propose a Wide & Deep, CNN model to detect electricity theft in smart grids. In particular, our Wide& Deep, CNN model consists of the Wide component and the Deep, CNN component; it gains the benefits of memorization and generalization brought by the Wide component and the Deep CNN component, respectively. We conduct extensive experiments on realistic electricity consumption data released by State Grid Corporation of China (SGCC), the largest electricity supply company in China. The experiment results show that our proposed Wide & Deep, CNN outperforms existing methods, such as linear regression, support vector machine, random forest and CNN. In fact, the proposed Wide& Deep CNN model is quite general; it can be applied to other scenarios, especially for industrial applications. For example, indoor marihuana growing companies often steal the power grid [43]. Since it consumes extremely high amounts of electricity to grow marihuana, the abnormal electricity usage patterns can be captured by the proposed Wide& Deep CNN mode.

Yuanqi Gao et al.[7] proposed in this paper developed a physically inspired data-driven algorithm for electricity theft detection. The proposed algorithm leverages an approximate linear relationship between the power consumption and voltage data of customers on the same secondary. The proposed MLM produces accurate estimates of the electricity consumption for the majority of the customers. The MLM model is able to detect inconsistencies among smart meter measurements of a group of customers from the same distribution secondary thereby identifying electricity thefts. An evaluation of the proposed electricity theft detection algorithm was then performed with real-world smart meter data and synthesized electricity theft cases. The evaluation results show that the proposed anomaly score developed in this paper is effective in identifying electricity theft cases even when the amount of stolen electricity is small. The method was compared with existing unsupervised electricity theft detection techniques. The comparison results show that the proposed method is more effective in identifying the electricity thefts

III.WORKING OF ELECTRICITY THEFT IDENTIFICATION SYSTEM

When AC is applied to the primary winding of the power transformer it can either be stepped down or up counting on the worth of DC needed. In our circuit the transformer of 230v/15-0-15v is employed to perform the step down operation where a 230V AC appears as 15V AC across the secondary coil [3] .The system architecture is given below:

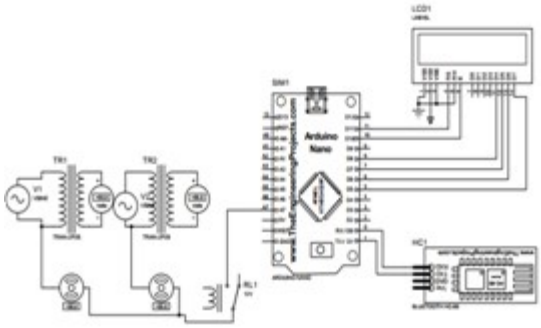

Fig.2 Circuit diagram of IOT based electricity theft detection system using Arduino NANO [4].

The DC voltage appearing across the output terminals of the bridge rectifier will be somewhat less than 90% of the applied RMS value [3]. Filter circuits, which is normally capacitor acts as wave arrester always follows the rectifier unit. This capacitor is also called as a decoupling capacitor or a bypassing capacitor, is used not only to " short "[5] the ripple with a frequency of 120Hz to ground, but also to leave the frequency of the DC to appear at the output[4].The voltage controls play an important task in any power supply unit. The primary purpose of a controller is to support the rectifier

and filter circuit supplying a constant DC voltage to the device

The LCD is powered up with 5V supply connected to Pins 1(Gnd) and 2(Vcc) [6]. The Pin 3 is connected to Vcc through a Potentiometer [6]. The potentiometer is used to adjust the contrast level [6]. Here in our project we use the PIC controller in 4-bit mode [6]. Here only 4 data pins are connected and are used as Data Port [6]. A Bluetooth module is widely used with Microcontroller to enable Bluetooth communication [6]. The Bluetooth is interfaced with PIC microcontroller, which contains at least one serial port [6].

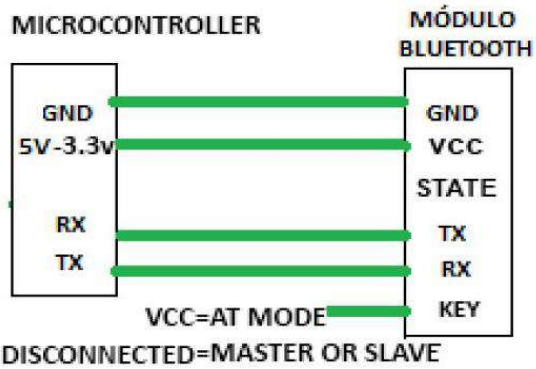

Fig.3 Bluetooth module interface with micro controller [6]

This module can be interfaced using the UART in PIC microcontroller where the data are transmitted in the form of packets [6]. The pins TX and RX pin of the HC 05 form the path for data transmission and reception [6]. These TX pin of HC05 must be connected to the RX pin of PIC Microcontroller and vice versa [6]. Whereas the key pin of the module is used to set the password for pairing the module with our devices [6].

A. Hardware

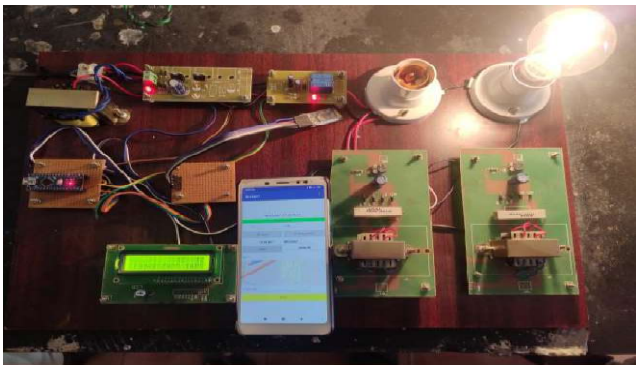

Fig.4 The hardware setup

IV. RESULTS

The below mentioned graph shows the voltage deviation in current transformer 2 due to current theft in between the poles. After the theft detect relay get turn on and make power OFF for the entire area then indicate the power station about theft via SMS.

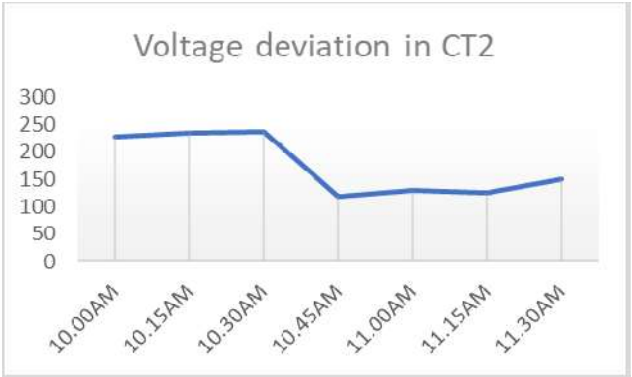

Fig.5 Voltage deviation graph

V. CONCLUSION

In this paper "LOCATION TRACKING AND DETECTION OF ELECTRICITY THEFT USING IOT" has been finished effectively and the output results are verified. The results are in step with the anticipated output. This plan has been checked with both software and hardware testing tools. In this work "LCD, Microcontroller, Current transformer, BLUETOOTH MODULE" are selected are proved to be greater suitable for the intended application. This paper is having enough avenues for future enhancement. This plan is a prototype model that fulfills all the logical requirements. This plan is with minimal improvements can be directly applicable for real time applications. Thus, the plan contributes a significant step forward in the field of "PUBLIC SAFETY", and further paves a road path towards faster developments in the same field. This paper is further adaptive towards continuous performance and peripheral up gradations. This work may be carried out to style of commercial and business applications.

REFERENCES

[1] P. Jokar, N. Arianpoo, and V. C. Leung, "Electricity theft detection in AMI using customers" consumption patterns," IEEE Transactions on Smart Grid, vol. 7, no. 1, pp. 216–226, 2016.

[2] Chun-sen XU, Xiang-jian CHEN, Di LI," Automatic Electric Meter Reading System Based on ZigBee"

Pub.No.978-1- 4244-2108-4/08/$25.00 © 2008 IEEE

[3] A.H. Nizar and Z.Y. Dong, "Identification and detection of electricity customer behaviour irregularities," in proceedings of IEEE Power Systems Conference and Exposition, pp. 1-10, Mar. 2009.

[4] S.S.S.R. Depuru, L. Wang, V. Devabhaktuni, and N. Gudi, "Measures and setbacks for controlling electricity theft," in proceedings of North American Power Symposium, pp. 1-8, Sept. 2010.

[5] R. E. Ogu and G. A. Chukwudebe, "Development of a cost-effective electricity theft detection and prevention system based on IoT technology," IEEE International Conference on Electro-Technology for National Development (NIGERCON), Owerri, 2017, pp. 756-760.

[6] Zheng Z, Yang Y, Niu X, Dai HN, Zhou Y., 2018. Wide and Deep Convolutional, Neural Networks for Electricity-Theft Detection to Secure Smart Grids. IEEE Transactions on Industrial Informatics, 14(4), pp.1606–1615.

[7] Gao, Y., Foggo, B. and Yu, N., 2019. A Physically Inspired Data-driven Model for Electricity Theft Detection with Smart Meter Data. IEEE Transactions on Industrial Informatics. DOI: 10.1109/TII.2019.2898171

[8] H.L. Pok, K.S. Yap, I.Z. Abidin, A.H. Hashim, Z.F. Hussien, and A.M. Mohamad, "Abnormalities and Fraud Electric Meter Detection using Hybrid Support Vector Machine and Modified Genetic Algorithm", in Proc. of the 19th International Conference on Electricity Distribution (CIRED) 2007, Vienna, May 21–24 2007.

[9] J. Nagi, K.S. Yap, S.K. Tiong, S.K. Ahmed, F. Nagi, "Improving SVMbased Nontechnical Loss Detection in Power Utility Using Fuzzy Inference System", accepted for publication in IEEE Trans. Power Del., June 2010. Manuscript ID: PESL-00108-2009.R2.

[10] A. Barua, N. Mohammad, M. A. Arafat and K. Khan, "Three phase SMS prepaid digital energy meters," International Conference on Electrical and Computer Engineering, December 2012, in press.

[11] N. Mohammad, A. Barua and M. Arafat, "A smart prepaid energy metering system to control electricity theft," International Conference on Power, Energy and Control (ICPEC), pp. 562-565, 8 Feb. 2013

[12] Sagar Patil, Gopal Pawaskar, Kirtikumar Patil, "Electrical Power Theft Detection and Wireless Meter Reading", International Journal of Innovative Research in Science, Engineering and Technology, Pg. 1114- 1119, Vol.2, Issue 4, April 2013

[13] M. H. Zweig and G. Campbell, "Receiver-operating characteristic (roc) plots: a fundamental evaluation tool in clinical medicine." Clinical Chemistry, vol. 39, no. 4, pp. 561–577, 1993. [Online]Available:http://clinchem.aaccjnls.org/content/39/4/561